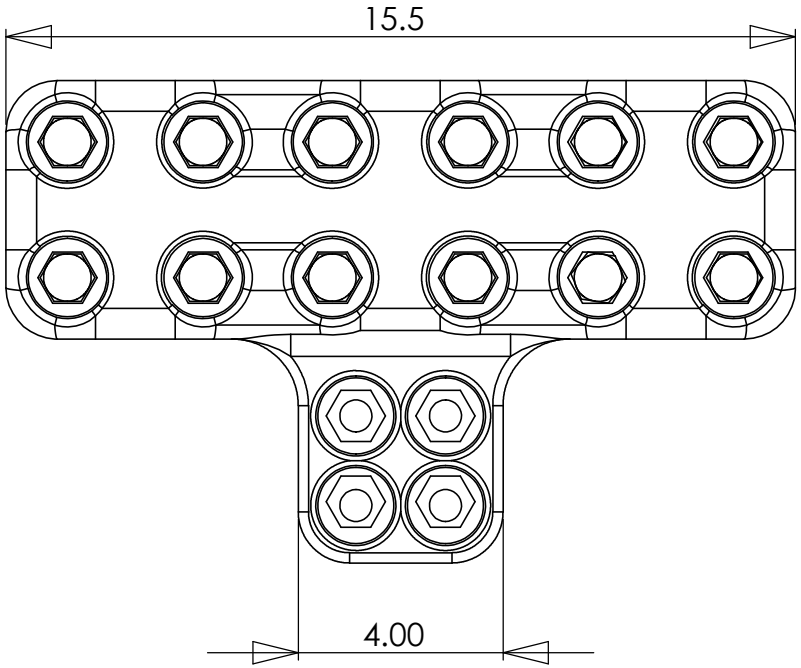

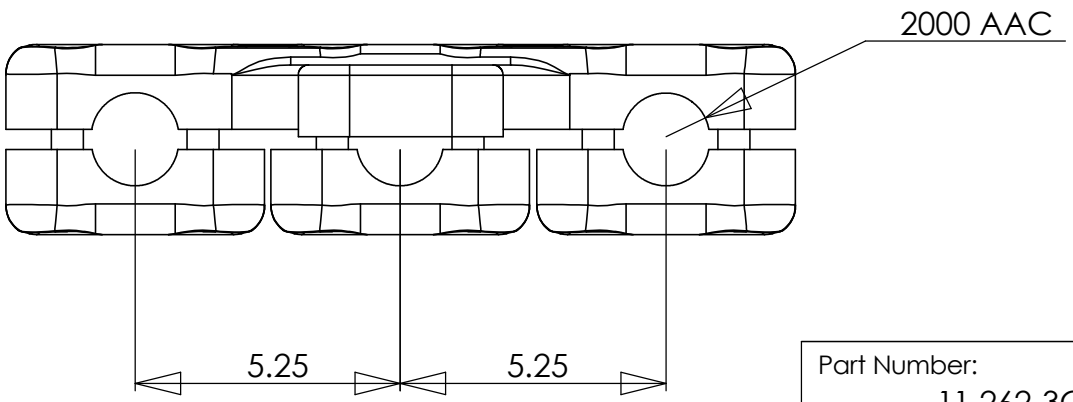

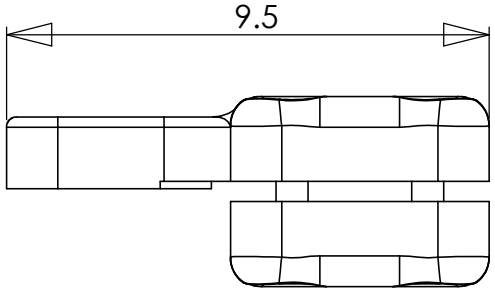

Part Number:
11-262-3C-CF-EHV-W1S(2000AAC)

DESCRIPTION: AL BOLTED TERM (3) 2000 AAC TO A CENTER FORMED 4X4 PAD EHV WITH CAST SHIELD

UNLESS OTHERWISE SPECIFIED:		NAME	DATE
DIMENSIONS ARE IN INCHES TOLERANCES: ± 1/16" ANGULAR: ± .5 DEG	DRAWN	TM	6/29/2009
	CHECKED		
MATERIAL: 356-T6	SCALE: 1:5	WEIGHT:	

TRAVIS
PATTERN & FOUNDRY, INC

PROPRIETARY AND CONFIDENTIAL

THE INFORMATION CONTAINED IN THIS DRAWING IS THE SOLE PROPERTY OF TRAVIS PATTERN & FOUNDRY. ANY REPRODUCTION IN PART OR AS A WHOLE WITHOUT THE WRITTEN PERMISSION OF TRAVIS PATTERN & FOUNDRY IS PROHIBITED.

5 4 3 2 1