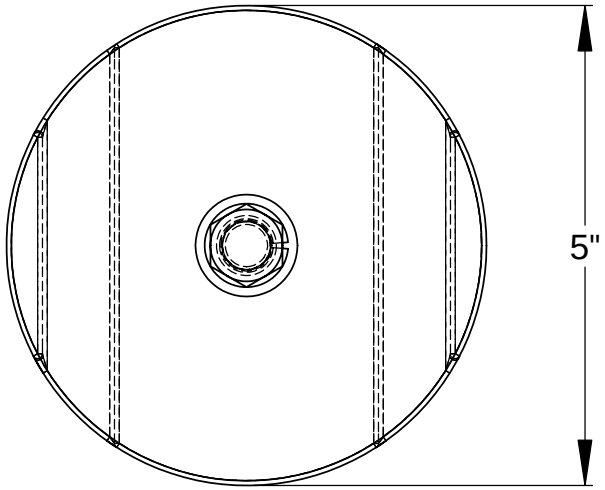

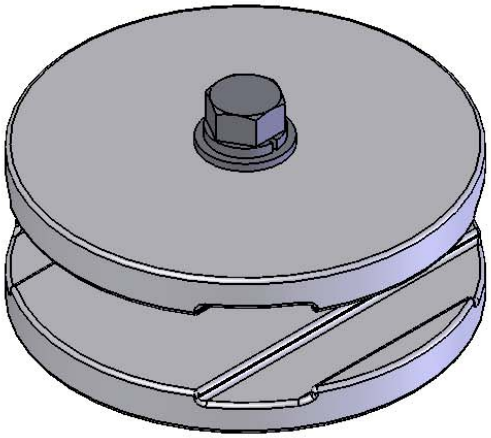

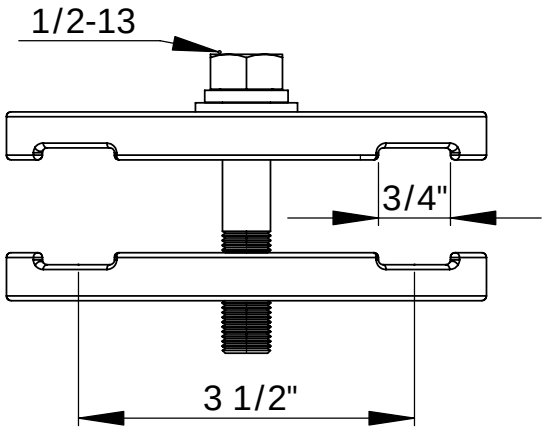

Part Number: 19-090			
DESCRIPTION: AL. BOLTED SANDWICH BUS SUPPORT 3 1/2" PARALLEL			
UNLESS OTHERWISE SPECIFIED:		NAME	DATE
DIMENSIONS ARE IN INCHES TOLERANCES: ± 1/16" ANGULAR: ± .5 DEG	DRAWN	TM	
	CHECKED		
MATERIAL	SCALE: 1:2	WEIGHT:	

TRAVIS
PATTERN & FOUNDRY, INC

PROPRIETARY AND CONFIDENTIAL

THE INFORMATION CONTAINED IN THIS DRAWING IS THE SOLE PROPERTY OF TRAVIS PATTERN & FOUNDRY. ANY REPRODUCTION IN PART OR AS A WHOLE WITHOUT THE WRITTEN PERMISSION OF TRAVIS PATTERN & FOUNDRY IS PROHIBITED.

5 4 3 2 1